23-MAY-2017 12:52
S:\Contracts\Contracts\Special Details\jhowerton\Standard Drawings\2012 Standard Drawings\Details in Lieu of Standards\Division 8\862d01 862d03 862d03\862d03.dgn
jhowerton AT CSD-292595

STATE OF NORTH CAROLINA
DEPT. OF TRANSPORTATION
DIVISION OF HIGHWAYS
RALEIGH, N.C.

ROADWAY DETAIL DRAWING FOR
GUARDRAIL ANCHOR UNIT
GUARDRAIL ANCHOR UNIT TYPE B-77
FOR F-SHAPE BARRIER

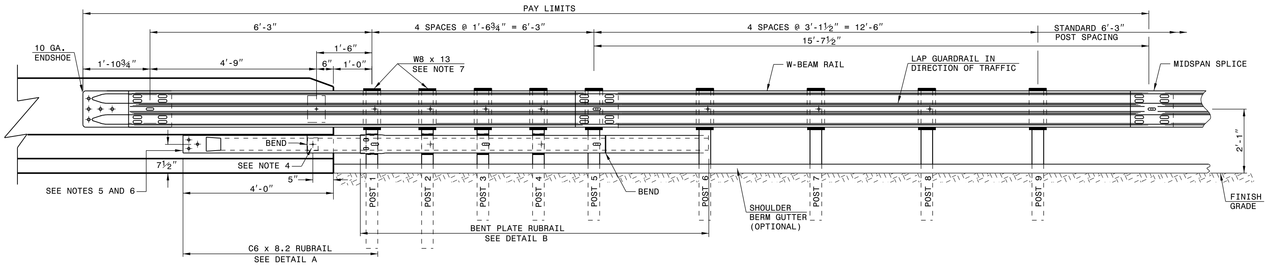

ELEVATION

GENERAL NOTES:
1) POSTS 1 THROUGH 5 REQUIRE AN ADDITIONAL HOLE TO ATTACH LOWER BLOCKOUTS AND/OR RUBRAIL.
2) RUBRAIL BLOCKOUTS LOCATED ON POSTS 1 THROUGH 4 ARE OFFSET DRILLED AND SECURED WITH ⅝" BUTTONHEAD BOLTS (SEE CHART FOR BOLT LENGTHS). SECURE BLOCKS ONLY TO POSTS 2 AND 4. SECURE RUBRAIL AND BLOCKOUTS TO POSTS 1 AND 3. RUBRAIL IS SECURED TO POST 5 WITH A ⅝" x 4½" BUTTONHEAD BOLT. RUBRAIL IS FLARED TO BACK OF POST 6 AND NOT SECURED.
3) STEEL SPACER TUBE IS A SCHEDULE 40 GALVANIZED PIPE 6" INSIDE DIAMETER x 9" LONG. ATTACH TUBE TO GUARDRAIL ONLY WITH ⅝" x 1¼" LONG BUTTONHEAD BOLT AND RECTANGULAR PLATE WASHER.
4) SEE DETAIL D FOR SLOPED RUBRAIL BLOCKOUT. BLOCKOUT IS ATTACHED TO RAIL ELEMENT ONLY. USE ⅜" x 3" LAG BOLT WITH FLAT WASHER.
5) SHOP FABRICATE THE C6 x 8.2 RUBRAIL END TO BE CONSISTENT WITH THE SLOPE OF THE F SHAPE AND ATTACH FLUSH WITH THE SLOPED TOE OF THE BARRIER OR BRIDGE RAIL.
6) ANCHORAGE:
   (a) AT EXISTING BRIDGE RAIL AND NEW OR EXISTING BARRIERS, ANCHOR RUBRAIL USING THREE ⅝" x 6" CHEMICALLY ANCHORED BOLTS WITH WASHERS. MAXIMUM PROJECTION FOR BOLTS IS ½".
   (b) AT EXISTING BRIDGE RAIL AND NEW OR EXISTING BARRIERS, ANCHOR THE W-BEAM END SHOE USING A 4 BOLT HOLD DOWN PLATE (SEE STD. DWG. 862.04). A 4 BOLT INSERT ASSEMBLY IS ALLOWED ON PRECAST REINFORCED CONCRETE BARRIER (SEE STD. DWG. 857.01). INSTALL THE W-BEAM END SHOE BEHIND THE NESTED W-BEAM ELEMENTS.
   (c) AT NEW BRIDGE RAIL, ANCHOR THE W-BEAM END SHOE AND RUBRAIL AS DETAILED ON THE STRUCTURE PLANS.
7) POSTS 1 AND 2 ARE W6 x 13, 7'-6" LONG. ALL OTHER POSTS IN THE ANCHOR UNIT ARE W6 x 8.5.

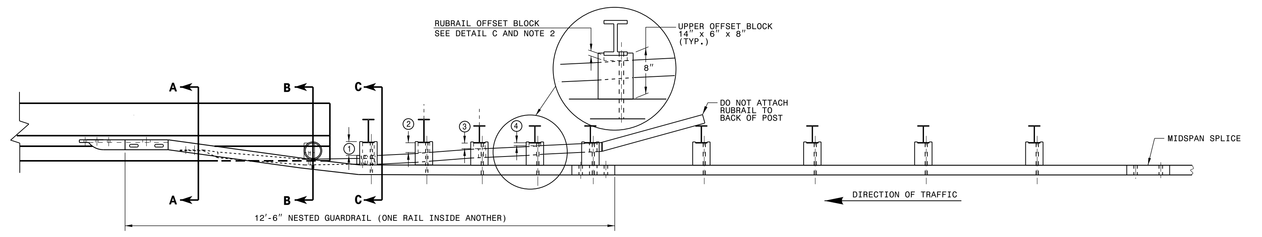

PLAN

GUARDRAIL ANCHOR UNIT TYPE B-77

SHEET 4 OF 7
862D03

STATE OF NORTH CAROLINA
DEPT. OF TRANSPORTATION
DIVISION OF HIGHWAYS
RALEIGH, N.C.

ROADWAY DETAIL DRAWING FOR
STRUCTURE ANCHOR UNIT
GUARDRAIL ANCHOR UNIT TYPE B-77
FOR F-SHAPE BARRIER

SHEET 4 OF 7
862D03

STATE OF NORTH CAROLINA
DEPT. OF TRANSPORTATION
DIVISION OF HIGHWAYS
RALEIGH, N.C.

ROADWAY DETAIL DRAWING FOR
STRUCTURE ANCHOR UNITS
GUARDRAIL ANCHOR UNIT, TYPE III

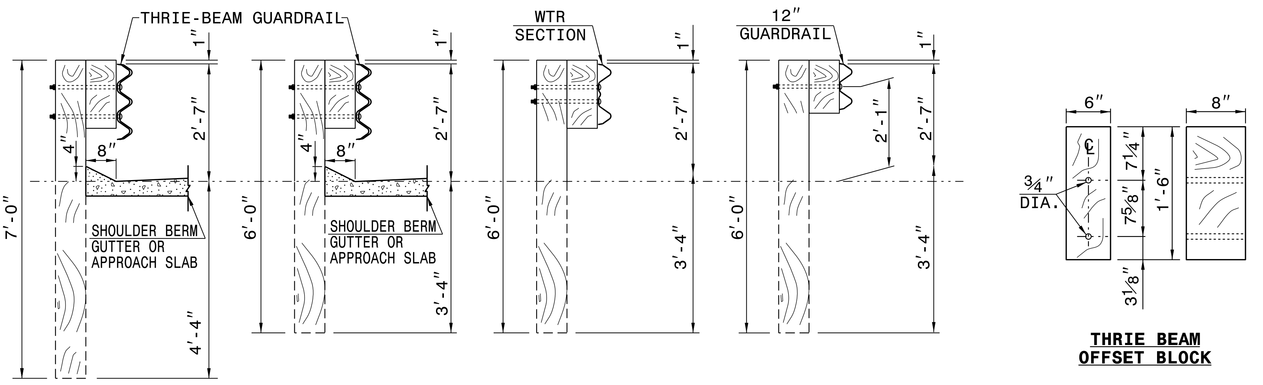

SECTION OF THRIE BEAM POSTS 1 THRU 6

SECTION OF THRIE BEAM POST 7

SECTION OF WTR BEAM POST 8

SECTION OF 'W' BEAM POST 9

THRIE BEAM OFFSET BLOCK

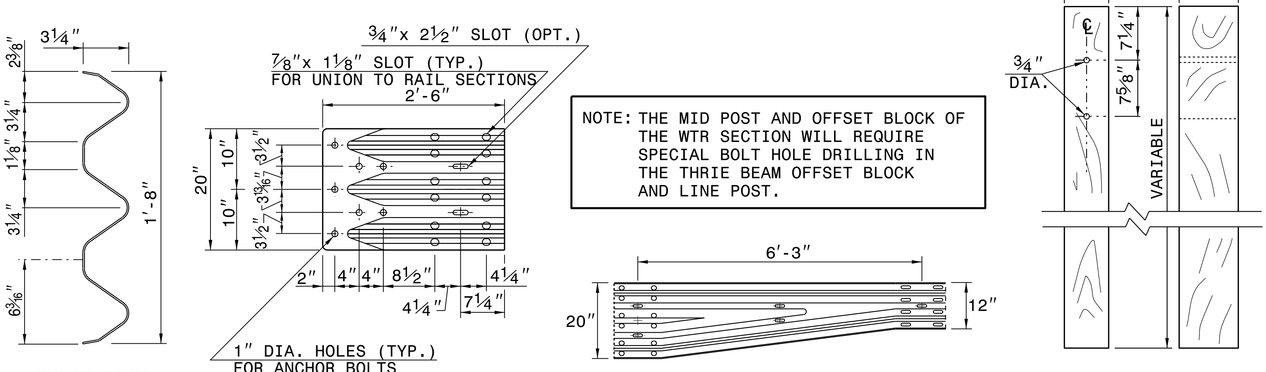

NOTE: THE MID POST AND OFFSET BLOCK OF THE WTR SECTION WILL REQUIRE SPECIAL BOLT HOLE DRILLING IN THE THRIE BEAM OFFSET BLOCK AND LINE POST.

THRIE-BEAM SECTION

END SHOE

WTR SECTION
ELEVATION VIEW

THRIE BEAM LINE POST

SHEET 3 OF 7
862D03

STATE OF NORTH CAROLINA
DEPT. OF TRANSPORTATION
DIVISION OF HIGHWAYS
RALEIGH, N.C.

ROADWAY DETAIL DRAWING FOR
STRUCTURE ANCHOR UNITS
GUARDRAIL ANCHOR UNIT, TYPE III

SHEET 3 OF 7
862D03

SEE TITLE BLOCK

ORIGINAL BY: J. HOWERTON DATE: 06-22-12
MODIFIED BY: DATE:
CHECKED BY: DATE:
FILE SPEC.:

CONTRACT STANDARDS AND DEVELOPMENT UNIT
Office 919-707-6950 FAX 919-250-4119

DOCUMENT NOT CONSIDERED FINAL UNLESS ALL SIGNATURES COMPLETED

8/7/2017

PROJECT REFERENCE NO. B-5601
SHEET NO. 2C-3