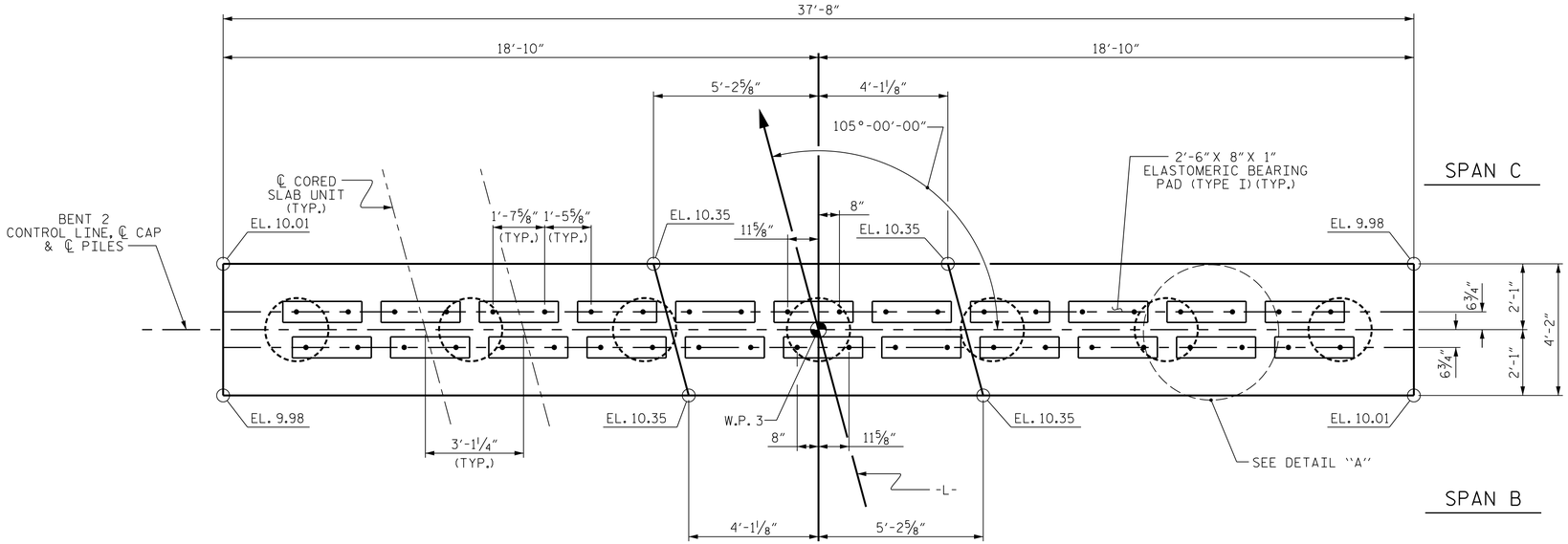

PLAN

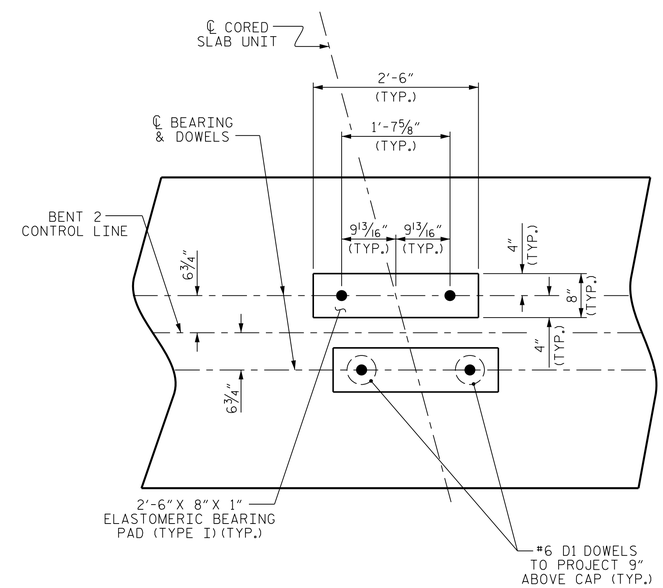

DETAIL "A"

(DIMENSIONS ARE TYPICAL EACH BEARING)

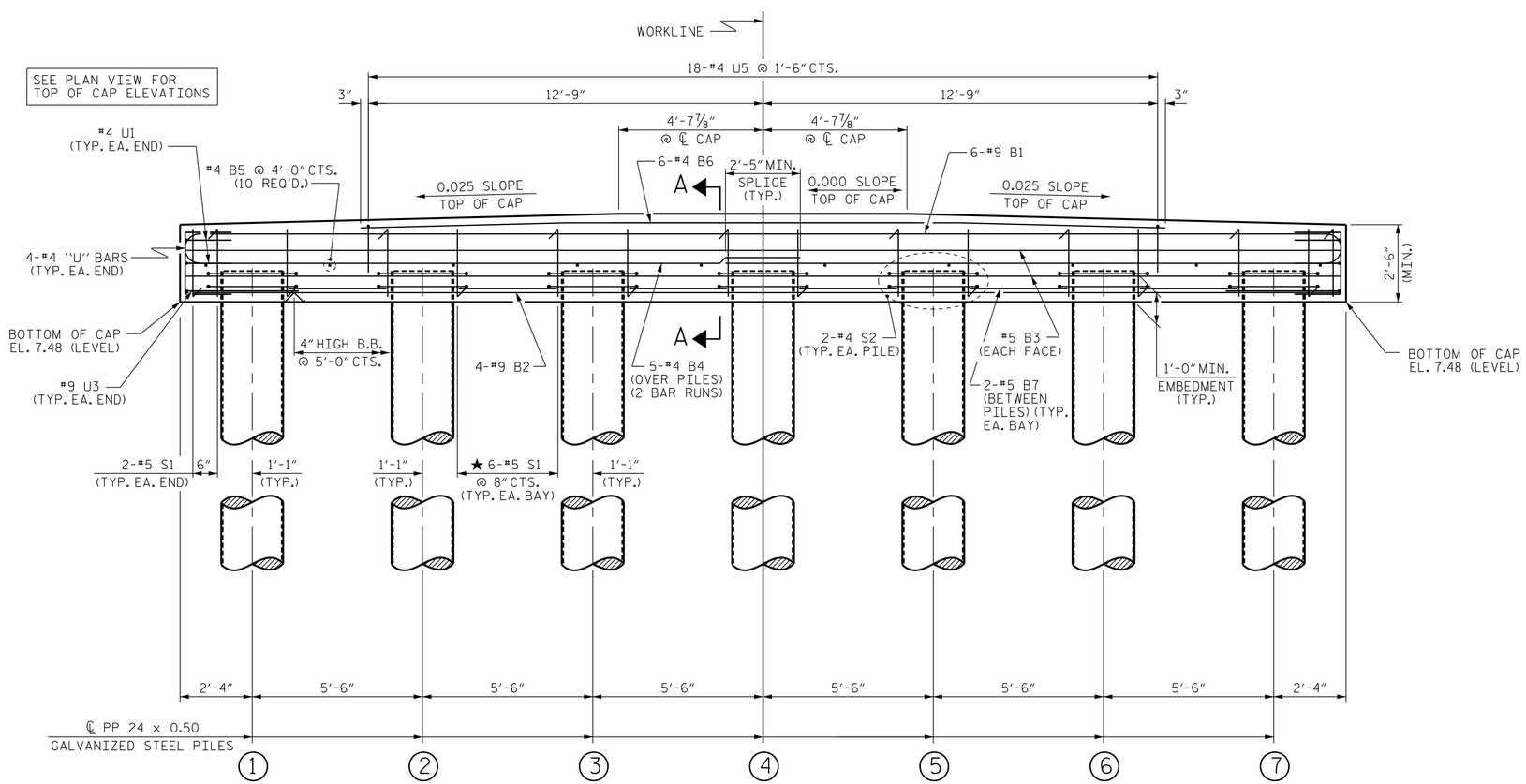

ELEVATION

FOR SECTION A-A, SEE SHEET 2 OF 2

NOTES

STIRRUPS IN CAP MAY BE SHIFTED AS NECESSARY TO CLEAR DOWELS.

★ INVERT ALTERNATE STIRRUPS.

FOR ADDITIONAL REINFORCING STEEL IN PP 24 x 0.50 GALVANIZED STEEL PILES, SEE "24" STEEL PIPE PILE" SHEET.

GALVANIZE THE FULL LENGTH OF EACH INTERIOR BENT PILE IN ACCORDANCE WITH SECTION 1076 OF THE STANDARD SPECIFICATIONS.

PROJECT NO. B-5601

WASHINGTON COUNTY

STATION: 16+35.00 -L-

SHEET 1 OF 2

STATE OF NORTH CAROLINA
DEPARTMENT OF TRANSPORTATION
RALEIGH

SUBSTRUCTURE

BENT No. 2

NORTH CAROLINA PROFESSIONAL SEAL 24939 ENGINEER BYRON E. ATKINSON
10/17/2017

DOCUMENT NOT CONSIDERED FINAL UNLESS ALL SIGNATURES COMPLETED

MI ENGINEERING
1011 SCHAUB DRIVE, SUITE 100
RALEIGH, NC 27606
(919) 851-6606
FIRM PE NUMBER : P-0671

REVISIONS						
NO.	BY:	DATE:	NO.	BY:	DATE:	
1			3			
2			4			

SHEET NO. S-20

TOTAL SHEETS 31

DRAWN BY :	B.E. LANNING	DATE :	08/17
CHECKED BY :	B.E. ATKINSON	DATE :	08/17
DESIGN ENGINEER OF RECORD :	B.E. ATKINSON	DATE :	08/17

10/17/2017
11:43:47 AM
User: blanning
Filename: P:\NC Bridges\MI6003_VHB_Div. 1 Br. Repl. (4 Bridges)\MI6003.02_Washington 11_B-5601\B-5601\Structures\401_039_B5601_SMU_B2A.dgn