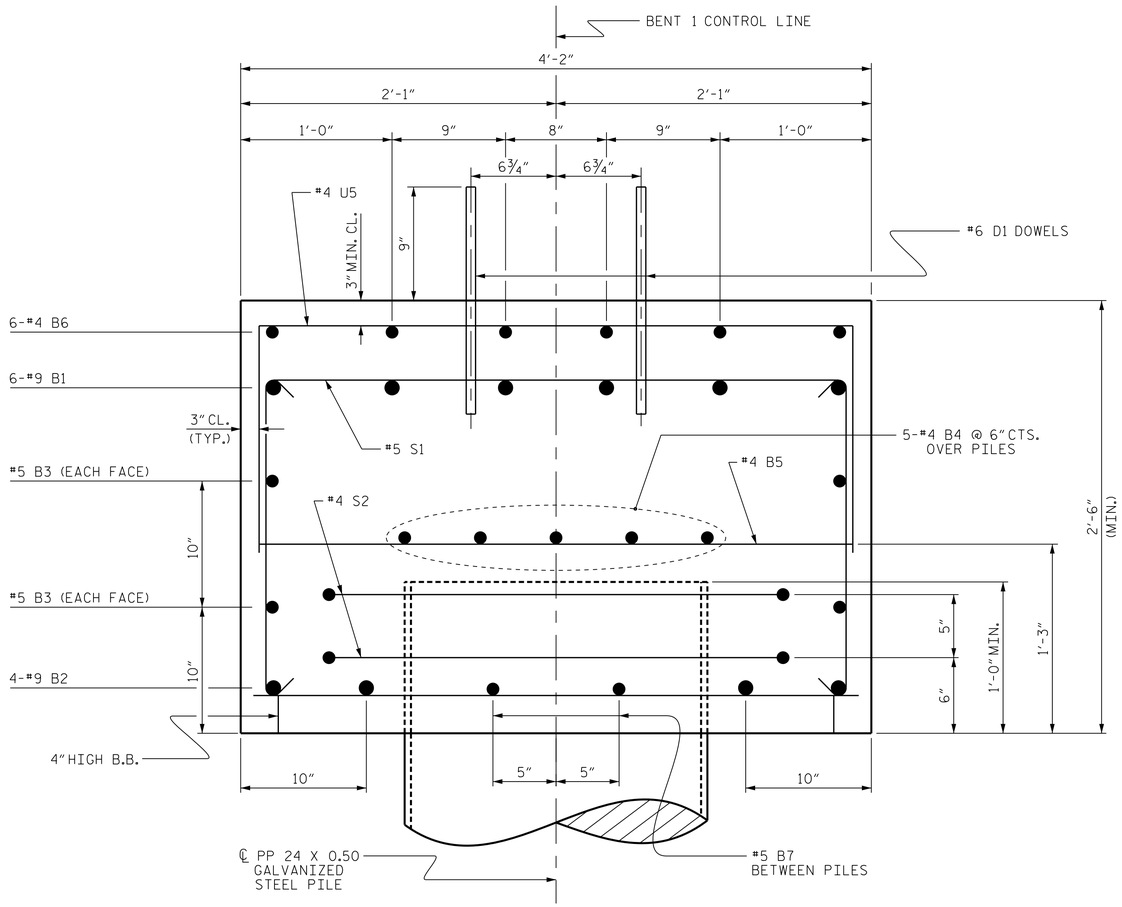


SECTION A-A

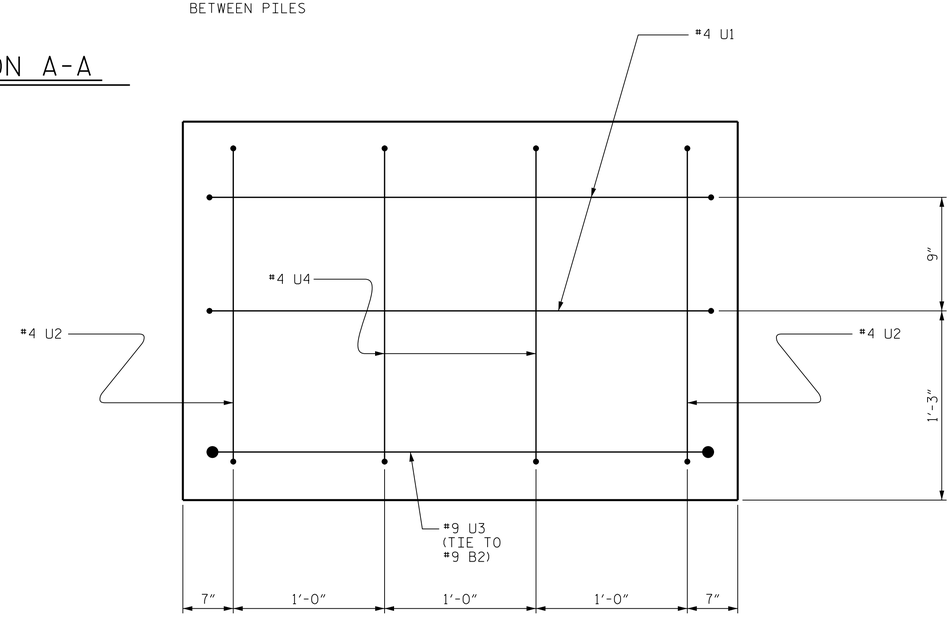


END OF CAP VIEW

(TYPICAL BOTH ENDS)

## BAR TYPES

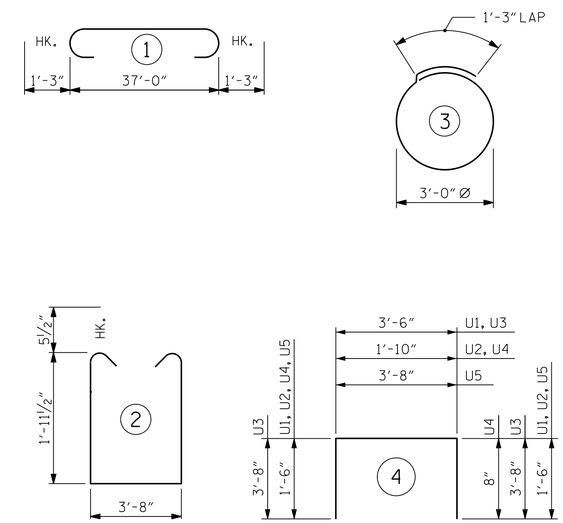


ALL BAR DIMENSIONS ARE OUT TO OUT.

## BILL OF MATERIAL

### BENT 1

| BAR | NO. | SIZE | TYPE | LENGTH | WEIGHT |
|---|---|---|---|---|---|
| B1 | 6 | #9 | 1 | 39'-6" | 806 |
| B2 | 4 | #9 | STR | 37'-2" | 505 |
| B3 | 4 | #5 | STR | 37'-2" | 155 |
| B4 | 10 | #4 | STR | 19'-10" | 132 |
| B5 | 10 | #4 | STR | 3'-8" | 24 |
| B6 | 6 | #4 | STR | 26'-0" | 104 |
| B7 | 12 | #5 | STR | 3'-2" | 40 |
| | | | | | |
| D1 | 44 | #6 | STR | 1'-6" | 99 |
| | | | | | |
| S1 | 40 | #5 | 2 | 8'-6" | 355 |
| S2 | 14 | #4 | 3 | 10'-8" | 100 |
| | | | | | |
| U1 | 4 | #4 | 4 | 6'-6" | 17 |
| U2 | 4 | #4 | 4 | 4'-10" | 13 |
| U3 | 2 | #9 | 4 | 10'-10" | 74 |
| U4 | 4 | #4 | 4 | 4'-0" | 11 |
| U5 | 18 | #4 | 4 | 6'-8" | 80 |

EPOXY COATED REINFORCING STEEL 2515 LBS.

CLASS AA CONCRETE BREAKDOWN
TOTAL CLASS AA CONCRETE ▲15.1 C.Y.

PP 24 X 0.50 GALVANIZED STEEL PILES
NO. 7 LIN. FT. 1022.0

PILE DRIVING EQUIPMENT SETUP FOR PP 24 X 0.50 GALVANIZED STEEL PILES NO. 7
PIPE PILE PLATES NO. 7
PILE REDRIVES NO. 7

▲ CONCRETE DISPLACED BY THE PP 24 x 0.50 GALVANIZED STEEL PILES HAS BEEN DEDUCTED FROM THE CONCRETE QUANTITY.

PROJECT NO. B-5601
WASHINGTON COUNTY
STATION: 16+35.00 -L-

SHEET 2 OF 2

STATE OF NORTH CAROLINA
DEPARTMENT OF TRANSPORTATION
RALEIGH

SUBSTRUCTURE

BENT No. 1

NORTH CAROLINA PROFESSIONAL SEAL 24939 ENGINEER BYRON E. ATKINSON
10/17/2017

DOCUMENT NOT CONSIDERED FINAL UNLESS ALL SIGNATURES COMPLETED

MI ENGINEERING
1011 SCHAUB DRIVE, SUITE 100
RALEIGH, NC 27606
(919) 851-6606
FIRM PE NUMBER : P-0671

| REVISIONS | | | | | | | | SHEET NO. |
|---|---|---|---|---|---|---|---|---|
| NO. | BY: | DATE: | NO. | BY: | DATE: | | | S-19 |
| 1 | | | 3 | | | | | TOTAL SHEETS |
| 2 | | | 4 | | | | | 31 |

| | | | |
|---|---|---|---|
| DRAWN BY : | B.E. LANNING | DATE : | 08/17 |
| CHECKED BY : | B.E. ATKINSON | DATE : | 08/17 |
| DESIGN ENGINEER OF RECORD : | B.E. ATKINSON | DATE : | 08/17 |

10/17/2017
11:43:45 AM
User: blanning
Filename: P:\NC Bridges\MI6003_VHB_Div. 1 Br. Repl. (4 Bridges)\MI6003.02_Washington 11_B-5601\B-5601\Structures\401_037_B5601_SMU_BIB.dgn