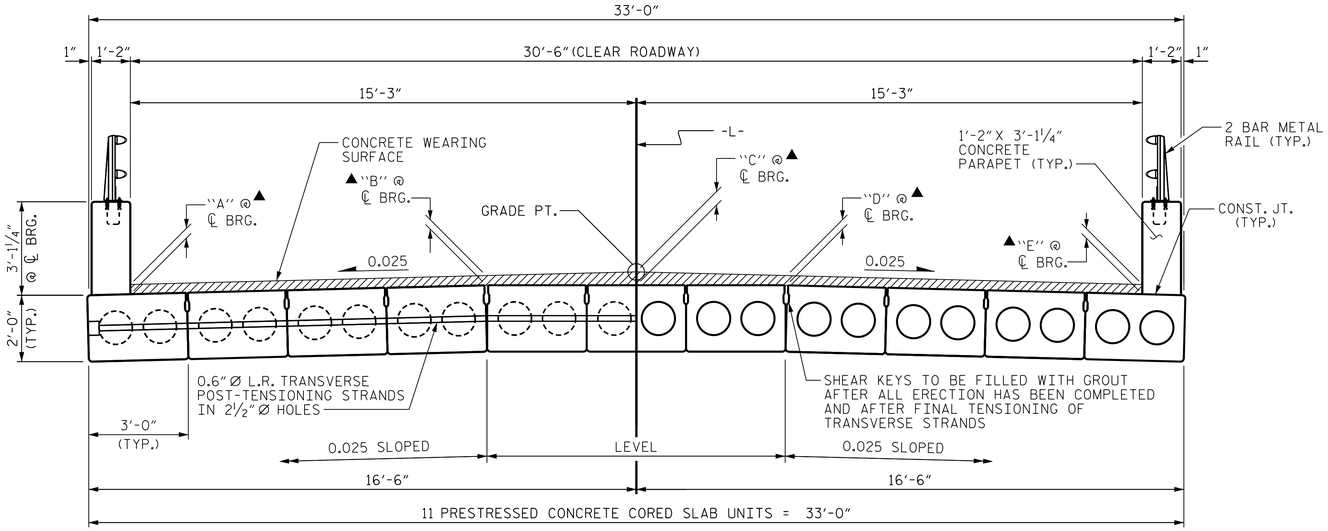

HALF SECTION
AT INTERMEDIATE DIAPHRAGMS

HALF SECTION
THROUGH VOIDS

TYPICAL SECTION

✳ - THE MAXIMUM PARAPET HEIGHT AND CONCRETE WEARING SURFACE THICKNESS IS SHOWN. THE HEIGHT OF THE PARAPET AND CONCRETE WEARING SURFACE THICKNESS VARIES WHILE THE TOP OF THE PARAPET FOLLOWS THE PROFILE OF THE GUTTERLINE. FOR PARAPET HEIGHT DETAILS AND CONCRETE WEARING SURFACE THICKNESS, SEE TABLE SHEET 3 OF 3 AND "CONCRETE WEARING SURFACE" SHEET.

▲ SEE "CONCRETE WEARING SURFACE" SHEET.

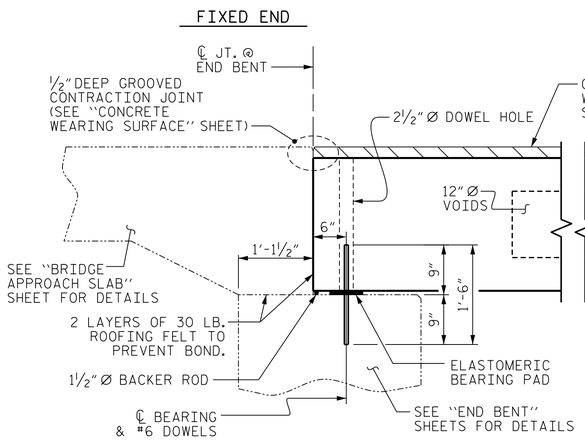

SECTION AT END BENT

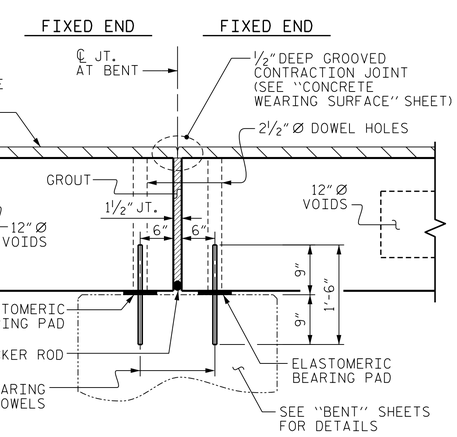

SECTION AT BENT

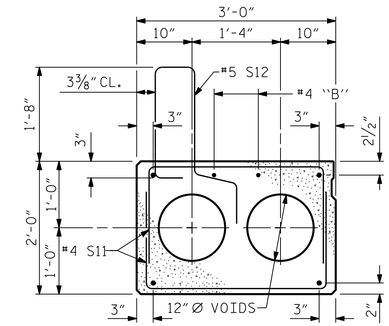

EXTERIOR SLAB SECTION

(FOR PRESTRESSED STRAND LAYOUT, SEE INTERIOR SLAB SECTION.)

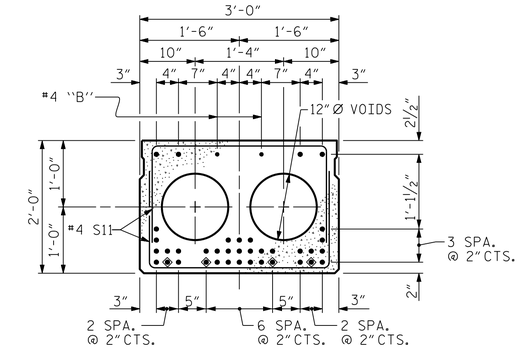

INTERIOR SLAB SECTION (60' UNIT)

(37 STRANDS REQUIRED)

0.6" Ø LOW RELAXATION STRAND LAYOUT

◈ BOND SHALL BE BROKEN ON THESE STRANDS FOR A DISTANCE OF 12'-0" FROM END OF CORED SLAB UNIT. SEE STANDARD SPECIFICATIONS, ARTICLE 1078-7.

DEBONDING LEGEND

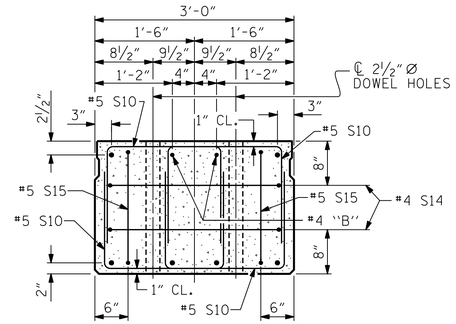

END ELEVATION

SHOWING PLACEMENT OF DOUBLE STIRRUPS AND LOCATION OF DOWEL HOLES. (STRAND LAYOUT NOT SHOWN.) INTERIOR SLAB UNIT SHOWN-EXTERIOR SLAB UNIT SIMILAR EXCEPT SHEAR KEY LOCATION.

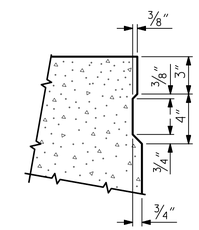

SHEAR KEY DETAIL

NOTE: OMIT SHEAR KEY ON OUTSIDE FACE OF EXTERIOR CORED SLABS.

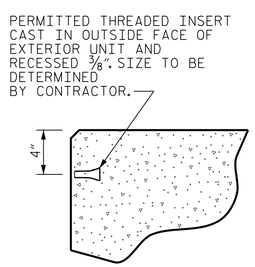

THREADED INSERT DETAIL

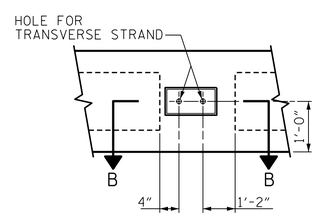

ELEVATION VIEW

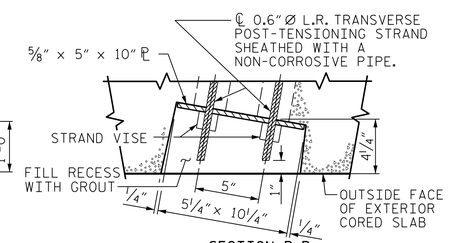

SECTION B-B

GROUTED RECESS AT END OF POST-TENSIONED STRAND-CORED SLABS

PROJECT NO. B-5601
WASHINGTON COUNTY
STATION: 16+35.00 -L-

SHEET 1 OF 3

STATE OF NORTH CAROLINA
DEPARTMENT OF TRANSPORTATION
RALEIGH

3'-0" X 2'-0"
PRESTRESSED CONCRETE
CORED SLAB UNIT
105° SKEW
SPANS A THRU E

NORTH CAROLINA PROFESSIONAL SEAL 24939 ENGINEER BYRON E. ATKINSON
10/17/2017

DOCUMENT NOT CONSIDERED FINAL UNLESS ALL SIGNATURES COMPLETED

MI ENGINEERING
1011 SCHAUB DRIVE, SUITE 100
RALEIGH, NC 27606
(919) 851-6606
FIRM PE NUMBER : P-0671

REVISIONS							SHEET NO.
NO.	BY:	DATE:	NO.	BY:	DATE:		S-6
1			3				TOTAL SHEETS
2			4				31

DRAWN BY :	B.E. LANNING	DATE :	01/17
CHECKED BY :	B.E. ATKINSON	DATE :	01/17
DESIGN ENGINEER OF RECORD :	B.E. ATKINSON	DATE :	08/17

10/17/2017
11:43:16 AM
User: blanning
Filename: P:\NC Bridges\M16003_VHB_Div. 1 Br. Repl. (4 Bridges)\M16003.02_Washington 11_B-5601\B-5601\Structures\401_011_B5601_SMU_CSU1.dgn