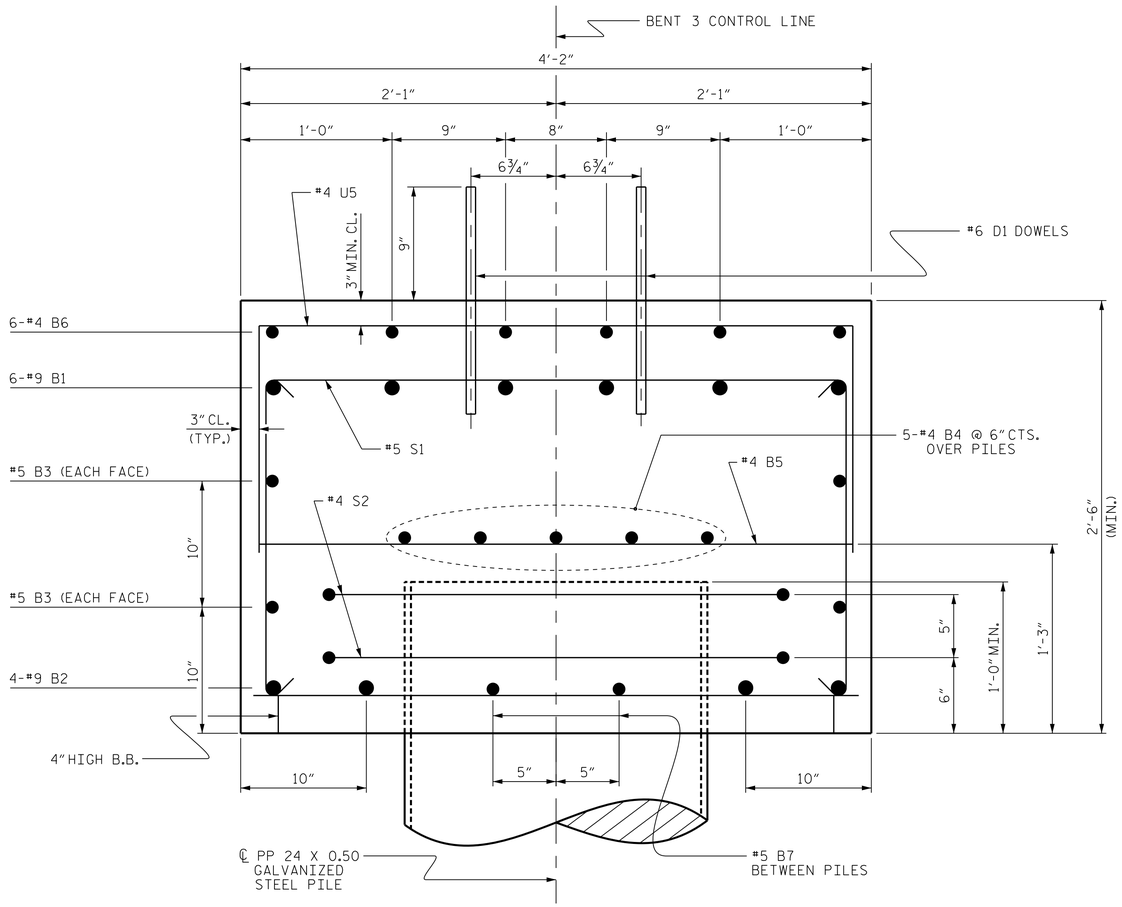

SECTION A-A

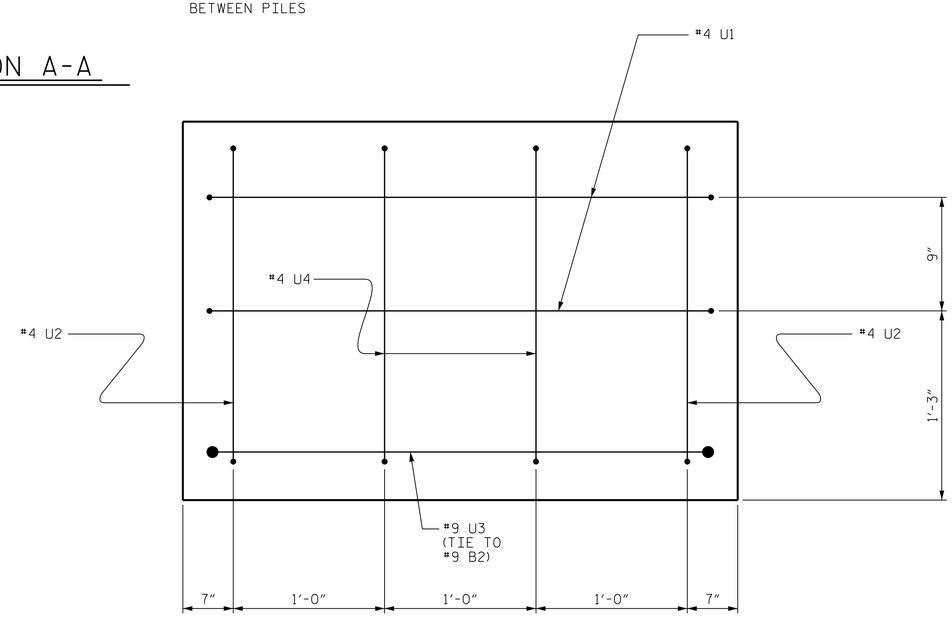

END OF CAP VIEW

(TYPICAL BOTH ENDS)

BAR TYPES

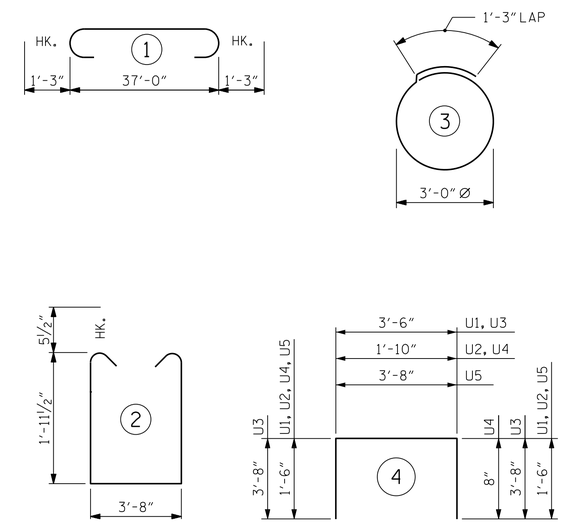

ALL BAR DIMENSIONS ARE OUT TO OUT.

BILL OF MATERIAL

BENT 3

BAR	NO.	SIZE	TYPE	LENGTH	WEIGHT
B1	6	#9	1	39'-6"	806
B2	4	#9	STR	37'-2"	505
B3	4	#5	STR	37'-2"	155
B4	10	#4	STR	19'-10"	132
B5	10	#4	STR	3'-8"	24
B6	6	#4	STR	26'-0"	104
B7	12	#5	STR	3'-2"	40
D1	44	#6	STR	1'-6"	99
S1	40	#5	2	8'-6"	355
S2	14	#4	3	10'-8"	100
U1	4	#4	4	6'-6"	17
U2	4	#4	4	4'-10"	13
U3	2	#9	4	10'-10"	74
U4	4	#4	4	4'-0"	11
U5	18	#4	4	6'-8"	80

EPOXY COATED REINFORCING STEEL 2515 LBS.

CLASS AA CONCRETE BREAKDOWN
TOTAL CLASS AA CONCRETE ▲15.1 C.Y.

PP 24 X 0.50 GALVANIZED STEEL PILES
NO. 7 LIN. FT. 812.0

PILE DRIVING EQUIPMENT SETUP FOR PP 24 X 0.50 GALVANIZED STEEL PILES NO. 7
PIPE PILE PLATES NO. 7
PILE REDRIVES NO. 7

▲ CONCRETE DISPLACED BY THE PP 24 x 0.50 GALVANIZED STEEL PILES HAS BEEN DEDUCTED FROM THE CONCRETE QUANTITY.

PROJECT NO. B-5601
WASHINGTON COUNTY
STATION: 16+35.00 -L-

SHEET 2 OF 2

STATE OF NORTH CAROLINA
DEPARTMENT OF TRANSPORTATION
RALEIGH

SUBSTRUCTURE

BENT No. 3

NORTH CAROLINA PROFESSIONAL SEAL 24939 ENGINEER BYRON E. ATKINSON
10/17/2017

DOCUMENT NOT CONSIDERED FINAL UNLESS ALL SIGNATURES COMPLETED

MI ENGINEERING
1011 SCHAUB DRIVE, SUITE 100
RALEIGH, NC 27606
(919) 851-6606
FIRM PE NUMBER : P-0671

REVISIONS								SHEET NO.
NO.	BY:	DATE:	NO.	BY:	DATE:			S-23
1			3					TOTAL SHEETS
2			4					31

DRAWN BY :	B.E. LANNING	DATE :	08/17
CHECKED BY :	B.E. ATKINSON	DATE :	08/17
DESIGN ENGINEER OF RECORD :	B.E. ATKINSON	DATE :	08/17

10/17/2017
11:43:54 AM
User: blanning
Filename: P:\NC Bridges\MI6003_VHB_Div. 1 Br. Repl. (4 Bridges)\MI6003.02_Washington 11_B-5601\B-5601\Structures\401_045_B5601_SMU_B3B.dgn